FOR-1754 Rev.1.2

未注公差/General tolerances(mm)														
0 ~ 3	>3 ~ 6	>6 ~ 10	>10 ~ 18	>18 ~ 30	>30 ~ 50	>50 ~ 80	>80 ~ 120	>120 ~ 180	>180 ~ 250	>250 ~ 315	>315 ~ 400	>400 ~ 500	>500	0.1/10
±0.12	±0.18	±0.22	±0.26	±0.31	±0.37	±0.57	±0.80	±0.93	±1.05	±1.15	±1.60	±2.20	±2.50	±2°

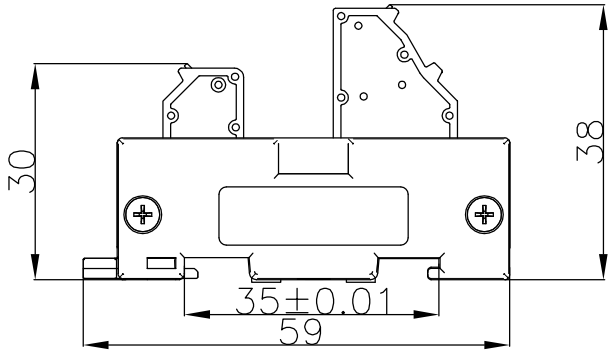

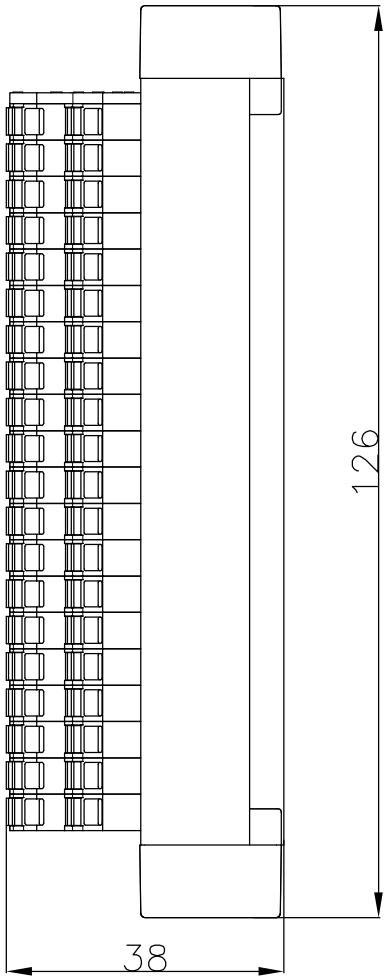

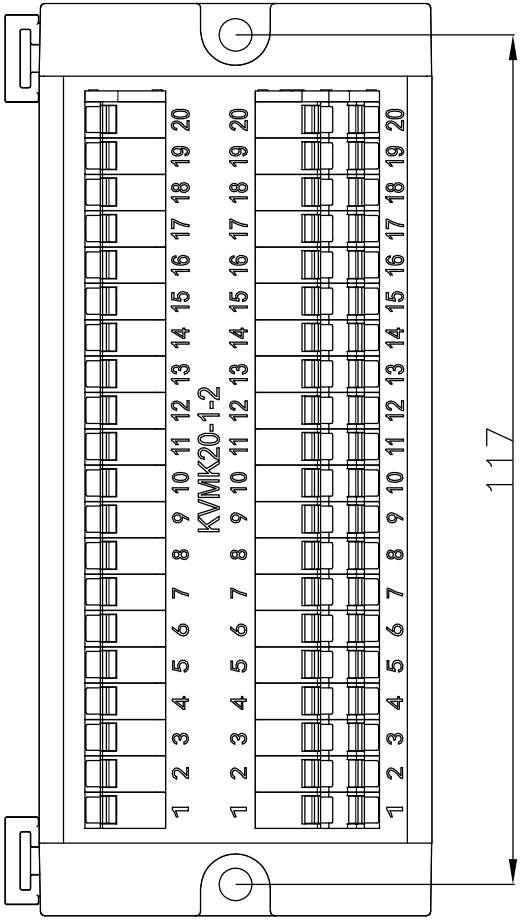

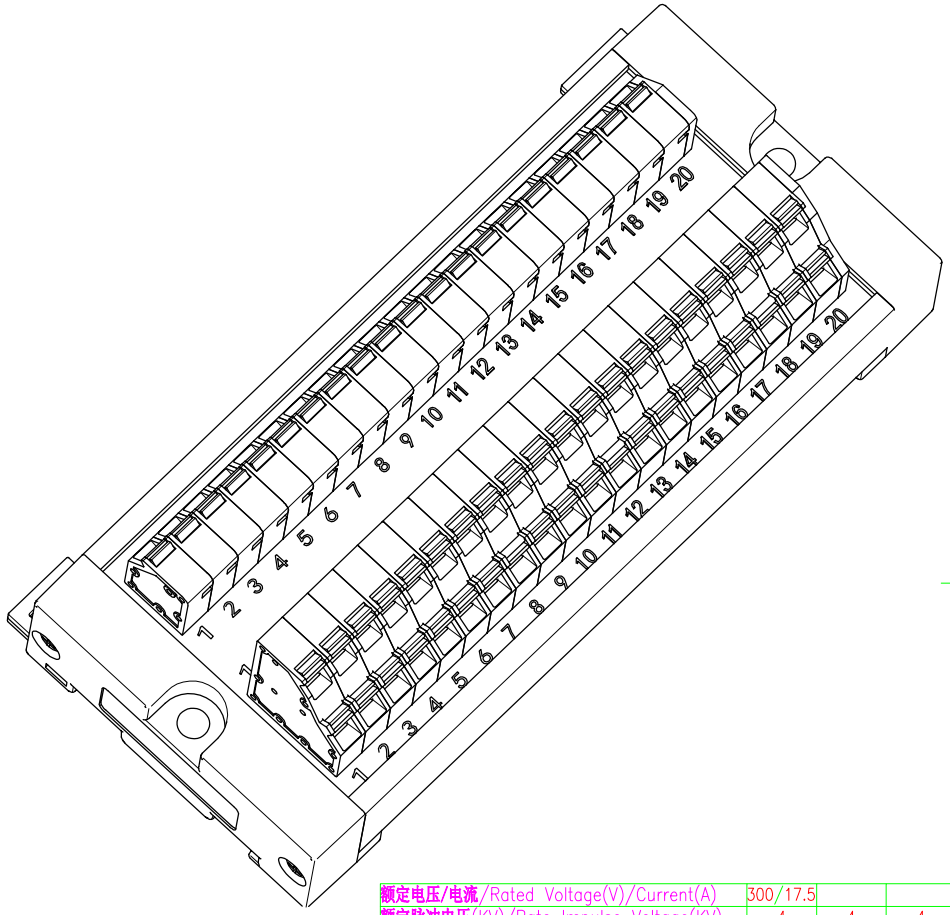

额定电压/电流/Rated Voltage(V)/Current(A)	300/17.5		
额定脉冲电压(KV)/Rate Impulse Voltage(KV)	4	4	4
线径范围(硬线和软线)/Wire Range(rigid and flexible)(mm²/AWG)	0.2~4/24~12		
尺寸/Size(mm)	126*55*38		
剥线长度/Stripping length(mm)	9-11		
使用温度范围/Operating temperature(°C)	-40~+105		
符合RoHS环保要求/Conform to RoHS	Yes		

MATERIAL: /	SURFACE:		
MAT NO.: /	康伟电子有限公司 KANGWEI ELECTRONICS CO.,LTD		
STATUS: /			
APPD:Lan ChH 2023.12.14	NAME: KVMK20-1-2		
CHKD:Yu JZh 2023.12.14			
DRFT:CENGMZ_2023.12.14	DRAWING NO.: KVMK20-1-2	REV	T0-1
SIZE:A4 mm (inch)	TYPE: CUSTOMER_DRAWING	SCALE: 2:1	SHEET 1/1