FOR-1754 Rev.1.2

| 未注公差/General tolerances(mm) | | | | | | | | | | | | | | |
|---|---|---|---|---|---|---|---|---|---|---|---|---|---|---|
| 0 ~ 3 | >3 ~ 6 | >6 ~ 10 | >10 ~ 18 | >18 ~ 30 | >30 ~ 50 | >50 ~ 80 | >80 ~ 120 | >120 ~ 180 | >180 ~ 250 | >250 ~ 315 | >315 ~ 400 | >400 ~ 500 | >500 | 0.1/10 |
| ±0.12 | ±0.18 | ±0.22 | ±0.26 | ±0.31 | ±0.37 | ±0.57 | ±0.80 | ±0.93 | ±1.05 | ±1.15 | ±1.60 | ±2.20 | ±2.50 | ±2° |

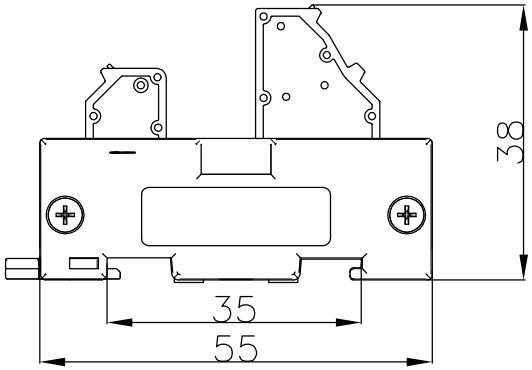


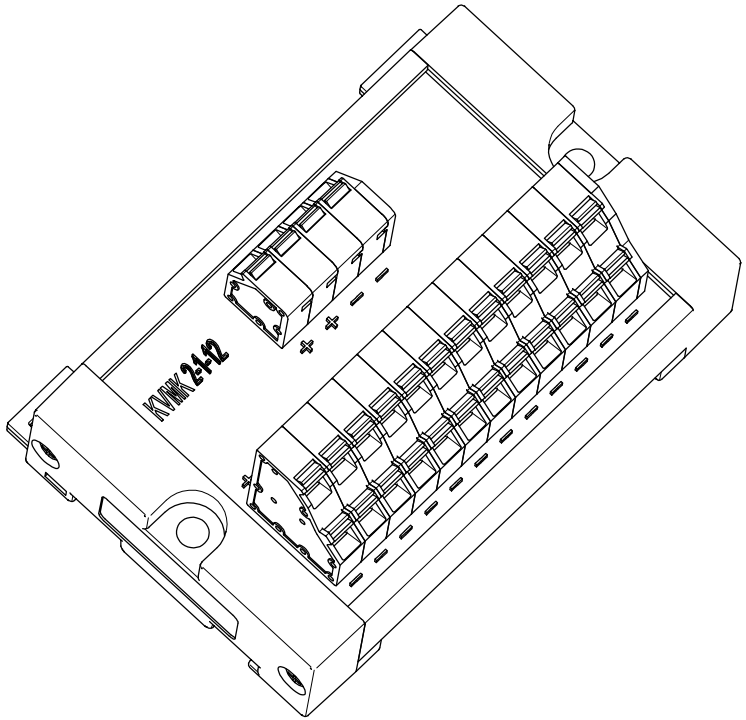


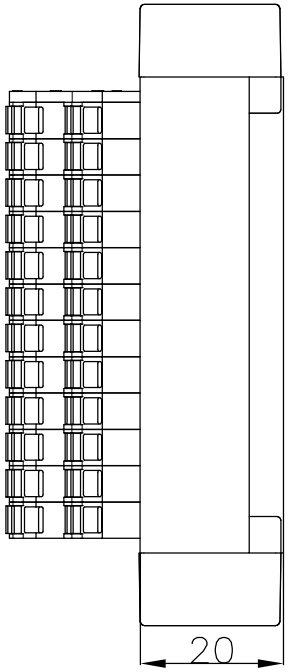


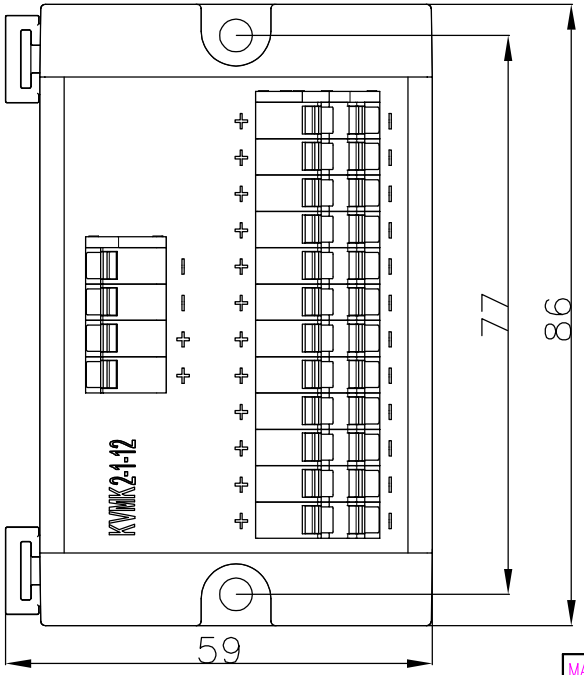


| | | | |
|---|---|---|---|
| 额定电压/电流/Rated Voltage(V)/Current(A) | 300/17.5 | | |
| 额定脉冲电压(KV)/Rate Impulse Voltage(KV) | 4 | 4 | 4 |
| 线径范围(硬线和软线)/Wire Range(rigid and flexible)(mm²/AWG) | 0.2~4/24~12 | | |
| 尺寸/Size(mm) | 86*55*38 | | |
| 剥线长度/Stripping length(mm) | 9-11 | | |
| 使用温度范围/Operating temperature(°C) | -40~+105 | | |
| 符合RoHS环保要求/Conform to RoHS | Yes | | |

| | | | |
|---|---|---|---|
| MATERIAL: / | SURFACE: | | |
| MAT NO.: / | 康伟电子有限公司 KANGWEI ELECTRONICS CO.,LTD | | |
| STATUS: / | | | |
| APPD:Lan ChH 2023.12.14 | NAME: KVMK2-1-12 | | |
| CHKD:Yu JZh 2023.12.14 | | | |
| DRFT:CENGMZ_2023.12.14 | DRAWING NO.: KVMK2-1-12 | REV | T0-1 |
| SIZE:A4 mm (inch) | TYPE: CUSTOMER_DRAWING | SCALE: 2:1 | SHEET 1/1 |